A.176

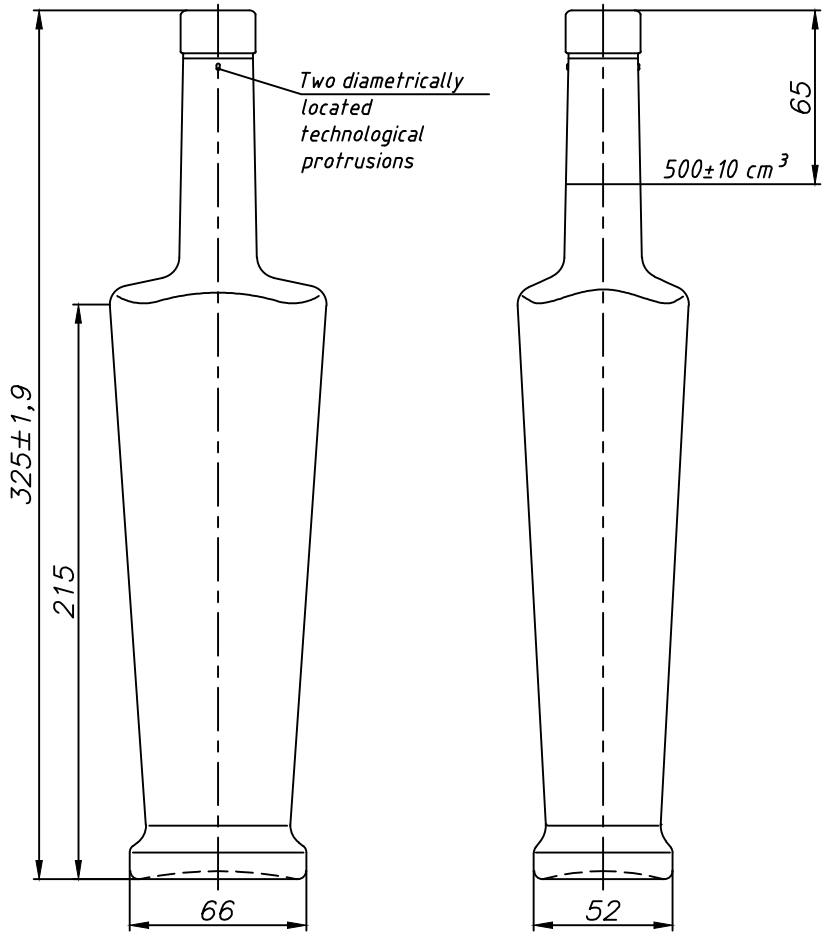


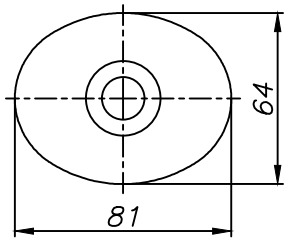


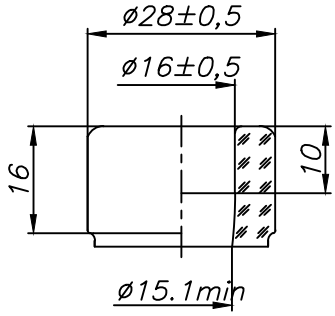


The controllable sizes of a glass finish
ø28±0,5
ø16±0,5 to the depth 10 mm from the top
ø15,1 min in the rest of the neck

Finish type $VP_6$

**Characteristics**
Nominal capacity, cm³ -500±10
Weight recommended, g - 493

**SM 195:1999 ; GOST 10117.1**
Thickness of walls not less-1.4 mm, at application of hardening, not less-1.2 mm
Thickness of a bottom not less-2.5 mm, at application of hardening, not less, -2.2 mm
Thermal stability ,difference of temperatures, not less, °C -35
Internal hydrostatic pressure during 60±2s not less, kgf/cm²-2

**Maximum deviations**

| | |
|---|---|
| from a vertical axis not more, mm | 4,6 |
| on height, mm | ±1,9 |

Agreed:

**The packing scheme of the bottles in the pallet**

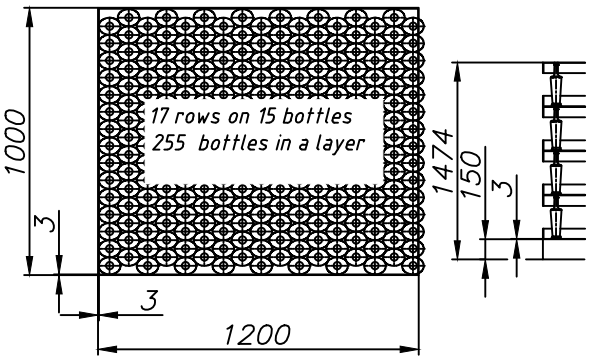


Quantity of layers: 4
Quantity of bottles in the pallet: 1020
Weight of the pallet, kg: 551
Roof: a cardboard
Cover: thermocontractable
For the stability of the bottles in the layer use corrugated strip.
For additional fastening, use two boards of length 1000mm and polypropylene tape.

Manual laying

| Change | Letter | Document N | Signature | Date |
|---|---|---|---|---|
| Designed | | Djalo A. I. | | 05.11.15 |
| Constr-r principal | | Djalo A. I. | | 05.11.15 |
| Dir. of manuf. | | | | |

A.176

Bottle "GRAND OVAL"-$VP_6$-500

Glass colourless

| Letter | Weight | Scale |
|---|---|---|
| | | 1:2 |
| Sheet | Sheets 1 | |

FSC

Copied

Format A3

Original accession and date | Signature of the head of accession | Duplicate accession and date | Signature and date